100+ YEARS OF EUROPEAN
TRUST & COMMITMENT

Next Step To Future

XR16/20

1.6-2.0 Ton Capacity Reach Truck

WHY BUY ME?

- High performance heavy duty Reach Truck with full AC motors
- Safest Reach Truck with OPS & dead-man switch system
- Safest Reach Truck in terms of electromagnetic braking system on drive wheel supported by mechanical brakes on load wheels
- Three variable travel speed for varied applications
- Easy to ride with 360 degree Electric Steering system

TOLL FREE NUMBER- 1800 270 1123

BRAND HISTORY

1917

Founded in **1917**; starts in 1918 the production of cars

1933

In **1933**,acquisition by FIAT Group

1937

In **1937** The Plants Of Milan And Brescia Are Unified And The agricultural Machinery Division Of Suzzarals Incorporated With TheGrowth Of 3 New Segments :
1.Buses, Trucks, **2.**Rail Equipment, Agricultural Tractors, Forklift Trucks, Marine Engines
3.Engine Pumps And Cooling Systems

1957

In **1957** OM becomes FIAT Carrelli Elevatori, belonging to IVECO Division

1961

In **1961** PIMESPO, Piccola Industria Meccanica sul Po was born in Luzzara, manufacturing WH Trucks

1981

In **1981** FIAT IVECO acquires PIMESPO.

1992

In **1992** LINDE Group acquires from FIAT the Forklift Division.

2002

In **2002** the Company changes his name into OM Carrelli Elevatori keeping the Brand OM PIMESPO.

2005

In **2005** Luzzara becomes a Plant for the whole STILL Group

2006

In **2006** Linde, Still and OM are unified into the KION Group.

2017

In **2017**, OM launched in Indian market.

REACH TRUCK - XR 16/ XR20

Maximum Reliability

- XR Reach Truck is equipped with modern AC motors and electrical systems and wiring protected to IP 45 meaning dust-proof and spray-proof

Safety and Ergonomics

- Hydraulic functions and the electrical controls ergonomically arranged for easy access and intiutive operation

Braking Systems

- 3 independent braking systems
- Electric brake with energy recovery
- Hydraulic brake acts on the two load wheels
- Electromagnetic parking brake which is activated in parking mode
- Emergency mode when the red safety button is pressed.

State-of-the-art electronic system

- The XR-16/20 uses a high frequency electronic system or traction and lift control

Salient Features

- Electronic Power Steering 360º
- Adjustable steering column
- Tilt Fork -2º / +4º
- Integral Side Shifter ± 100mm
- CAN BUS mode of fault detection
- Hydraulic Movement by Micro Levelers
- Proportional Controlled Hydraulics
- Two Simultaneous Movement (Lift & Carriage)
- Four Speed Profiles
- Electronic Creep Speed Selector
- Traction Speed, acceleration, electric braking, hydraulic braking & hydraulic function are electronically adjusted.
- Proportionally controlled hydraulic functions operated by potentiometric microlevers for precise control and movement.
- Polyurethane drive tyre to absorb shocks.
- Rugged mast
- Battery Roll Out
- FEM II B Forks 1150mm
- Regenerative Braking
- Load Backrest

Safety Features

- Dead Man Switch
- Emergency Stop Button
- Anti Tilt
- Adjustable weight Sensors to avoid accidental operation
- Three Braking Systems-Regenerative Braking, Hydraulic and Electromagnetic
- High Drive Position
- Excellent All Round Visibility
- Excellent Overhead visibility through Overhead Guard
- Seat Belt

OVERALL DIMENSIONS AND SPECIFICATIONS FOR XR16/ XR20 REACH TRUCK

CHARACTERISTICS	1.1	Manufacturer		KION	KION
	1.2	Model		XR 16	XR 20
	1.3	Power Unit		Electric	Electric
	1.4	Operator type		Seated	Seated
	1.5	Loading capacity	Q (t)	1.6T	2 T
	1.6	Center of gravity	c(mm)	600	600
	1.7	Load distance to fork , center of drive axle	x(mm)	403	374
	1.8	Wheel base	y(mm)	1442	1514
WHEEL & TYRES	2.1	Tyre type		VULKOLLAN	VULKOLLAN
	2.2	Size of traction wheels	mm	343 x 136	343 x 136
	2.3	Size of load wheels	mm	310 x 102	310 x 102
	2.4	Wheels: number at front/back (x = traction)		1x / 2	1x / 2
DIMENSIONS AND OVERALL SIZES	3.1	Fork tilt		2°/ 4°	2°/ 4°
	3.2	Total length	l1 (mm)	2450	2520
	3.3	Length to fork face	l2 (mm)	1406	1406
	3.4	Total width	b1 (mm)	1250	1250
	3.5	Fork dimensions	s/e/l (mm)	50 / 100 / 1150	50 / 100 / 1150
	3.6	Forks spread min/max	b5 (mm)	316/710	316/710
	3.7	Reach legs width (inside)	b4 (mm)	925	925
	3.8	Reach	l4 (mm)	628	598
	3.9	Ground clearance under mast - laden	m1 (mm)	100	100
	3.10	Ground clearance at wheel-base centre - laden	m2 (mm)	76	76
	3.11	90° stacking aisle 1000 x 1200 crosswise	Ast (mm)	2750	2840
	3.12	90° stacking aisle 1200 x 800 crosswise	Wa (mm)	2795	2890
	3.13	Minimum turning radius	l7 (mm)	1702	1770
	3.14	Length including reach legs		1870	1942
PERFORMANCE	4.1	Travel speed (loaded/unloaded)	km/h	12.0/12.0	12.0 / 12.0
	4.2	Lifting speed (loaded/unloaded)	m/s	0.32/ 0.60	0.2 / 0.5
	4.3	Lowering speed (loaded/unloaded)	m/s	0.54/ 0.46	0.4 / 0.4
	4.4	Max gradient (loaded/unloaded)	%	10/15	'9/15
	4.5	Max climbing gradient (loaded/unloaded)	%	10/15	'9/15
ENGINES	5.1	Traction motor, performance KB 60'	kW	6.5	6.5
	5.2	Lifting motor, performance 15% ED	kW	14	14
	5.3	Voltage / Rated capacity	V / Ah	48/ 620	48 / 700
	5.4	Weight of battery (+/-5%)	kg	1000	1185
OTHERS	6.1	Type of control		Electronic Tri-phase	"Electronic Tri-phase"
	6.2	Working pressure for attachment	bar	140	140
	6.3	Oil capacity	l/min	18	18
	6.4	Fork Carriage		FEM IIB	FEM IIB
	6.5	Noise level for operator	dB (A)	< 70	< 70

WEIGHT FOR VARIOUS REACH TRUCK MAST CONFIGURATIONS								
WEIGHT SPECIFICATIONS	**XR16 MAST CONFIGURATIONS (mm)**				**XR20 MAST CONFIGURATIONS (mm)**			
	7255	**7955**	**8955**	**9955**	**7955**	**8955**	**9955**	**11455**
Weight (Battery included) (Kg)	3500	3660	3790	3910	3860	3990	4050	4350
Axles unladen weight (Kg) (Front/Rear)	1400/2100	1540/2140	1600/2180	1572/2338	1544/2316	1695/2295	1742/2308	1784/2566
Axles laden weight - reach out (Kg) (Front/ Rear)	4320/780	4420/840	4560/840	4700/810	4980/880	5100/890	5142/908	5398/952
Axles laden weight - reach in (Kg) (Front/ Rear)	3220/1880	3260/2000	3340/2040	3234/2276	3634/2226	3714/2276	3751/2299	3937/2413

MAST DIEMSIONS & LOAD CAPACITY FOR VARIOUS MAST COMBINATIONS XOR XR16 WITH BATTERY SPECIFICATION 48V / 620 AH				
MAST FORK HEIGHT h3 (mm)	**h2 (mm)**	**h1 (mm)**	**h4 (mm)**	**Load capacity (kg)**
6655	2061	2930	7395	1600
6955	2061	2930	7625	1600
7255	2527	3376	7995	1600
7955	2527	3376	8695	1600
8955	3061	3910	9695	1400
9955	3581	4430	10739	1100

MAST DIEMSIONS & LOAD CAPACITY FOR VARIOUS MAST COMBINATIONS XOR XR20 WITH BATTERY SPECIFICATION 48V / 700 AH				
MAST FORK HEIGHT h3 (mm)	**h2 (mm)**	**h1 (mm)**	**h4 (mm)**	**Load capacity (kg)**
4655	1627	2476	5395	2000
5755	2061	2910	6495	1900
6655	2081	2930	7439	1700
7955	2581	3430	8739	1600
8955	3081	3930	9739	1400
9955	3581	4430	10939	1300
10655	3581	4430	11439	1150
11455	4081	4930	12239	850

*The specifications are subject to change without prior notice.

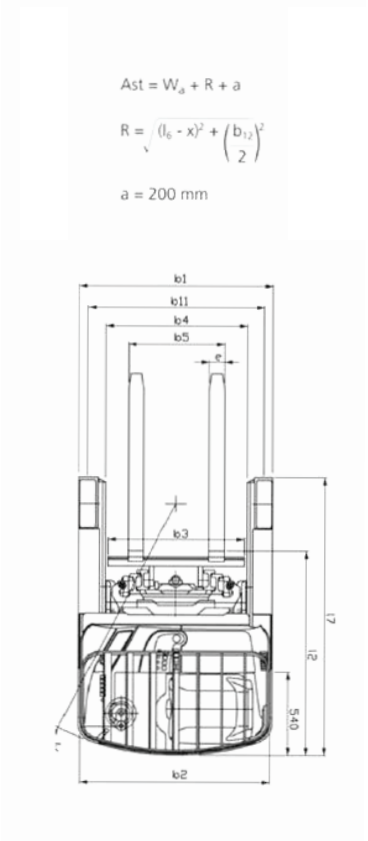

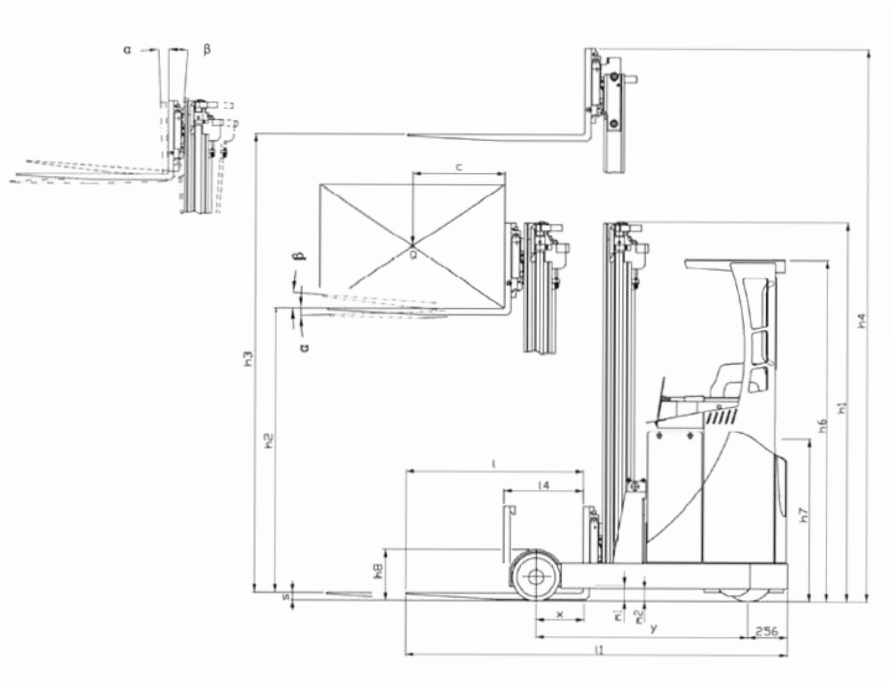

100+ CUSTOMER
TOUCH POINTS FOR SALES & SERVICE

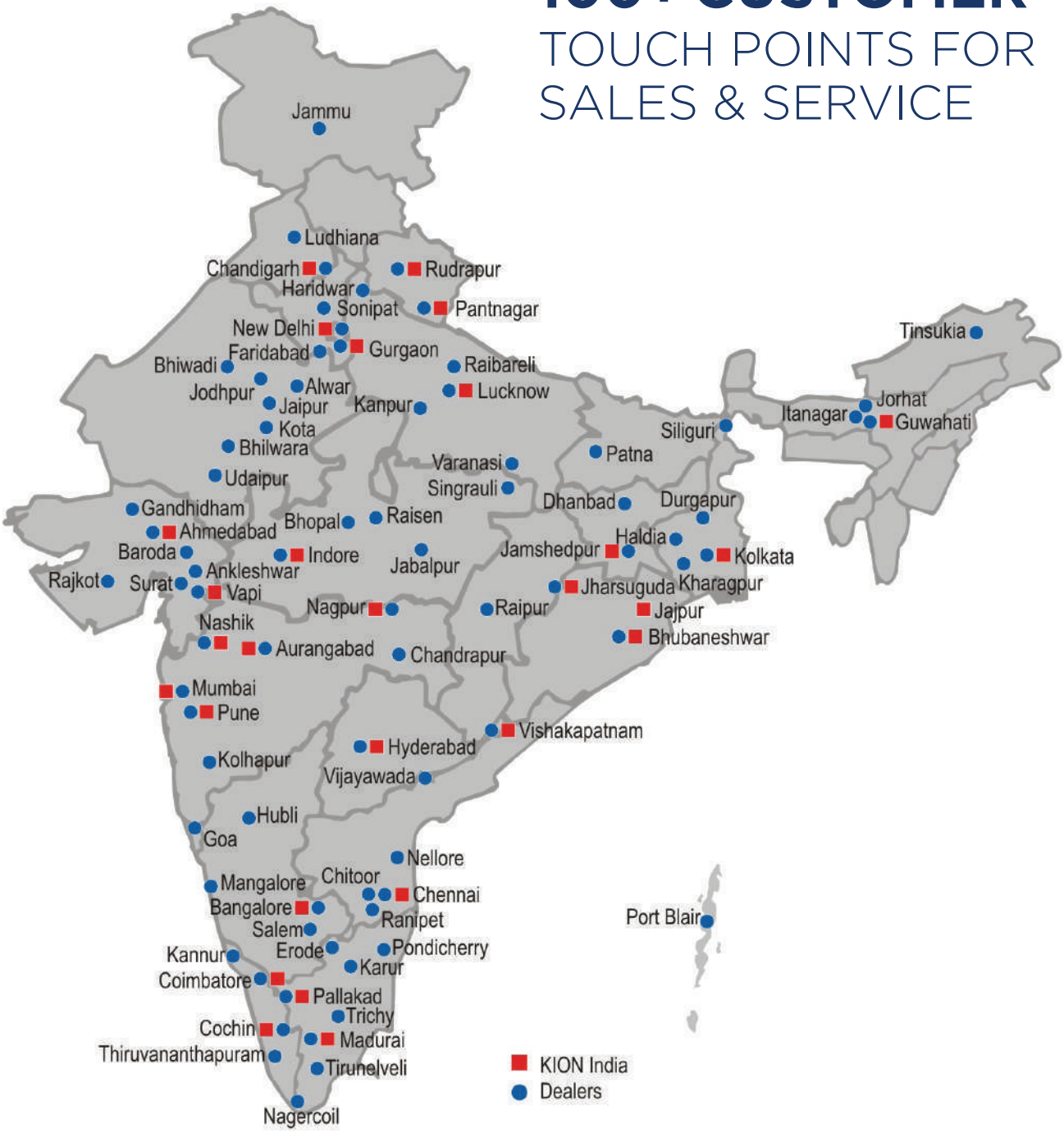

2019/ VER-1

Address :
KION INDIA Private Limited, 5/4 Chandan Nagar,
Pune Nagar Road, Pune-411014
TOLL FREE NUMBER- 1800 270 1123